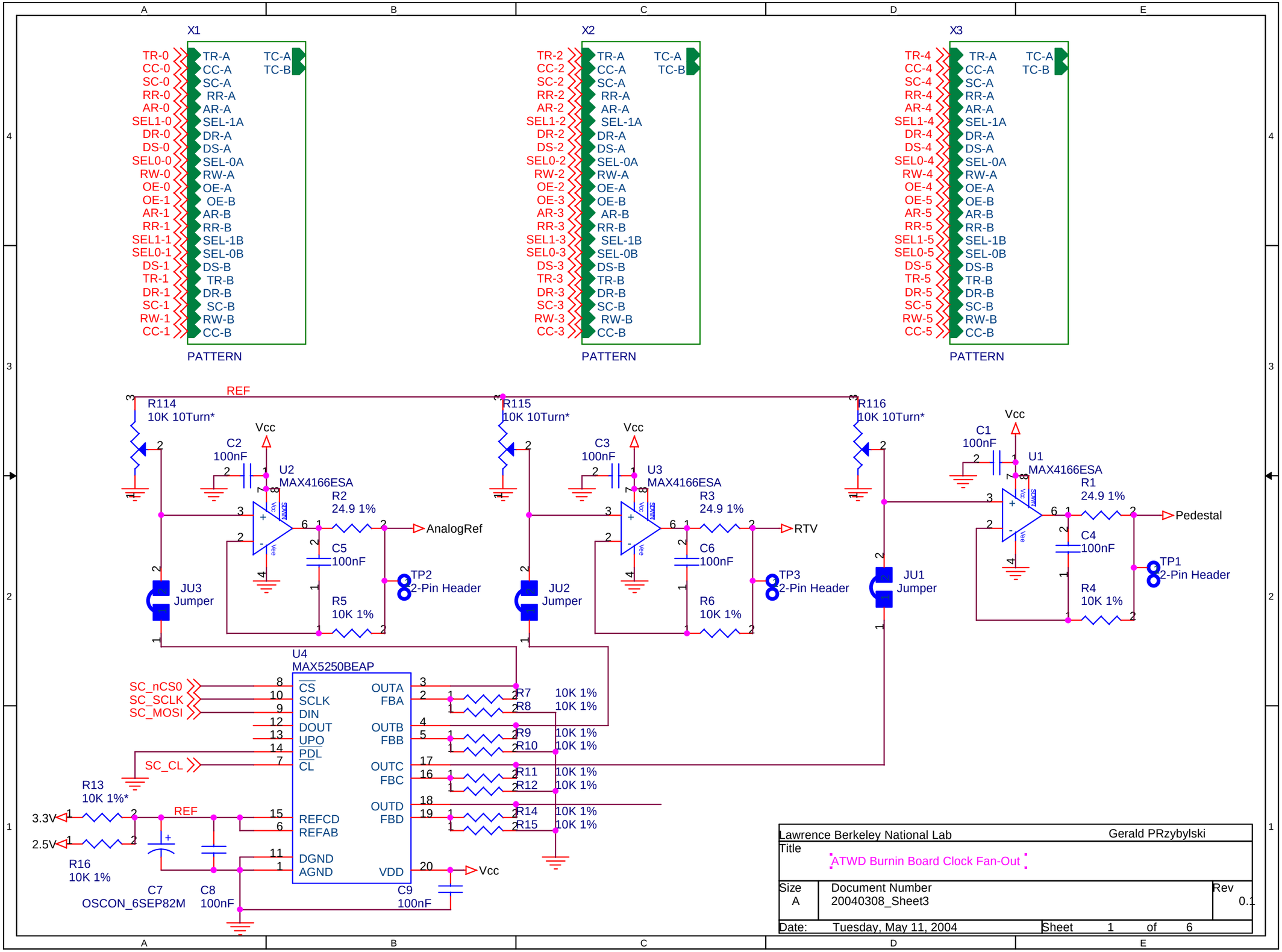
X1
TR-0 CC-0 SC-0 RR-0 AR-0 SEL1-0 DR-0 DS-0 SEL0-0 RW-0 OE-0 OE-1 AR-1 RR-1 SEL1-1 SEL0-1 DS-1 TR-1 DR-1 SC-1 RW-1 CC-1
TR-A CC-A SC-A RR-A AR-A SEL-1A DR-A DS-A SEL-0A RW-A OE-A OE-B AR-B RR-B SEL-1B SEL-0B DS-B TR-B DR-B SC-B RW-B CC-B
TC-A TC-B
PATTERN
X2
TR-2 CC-2 SC-2 RR-2 AR-2 SEL1-2 DR-2 DS-2 SEL0-2 RW-2 OE-2 OE-3 AR-3 RR-3 SEL1-3 SEL0-3 DS-3 TR-3 DR-3 SC-3 RW-3 CC-3
X3
TR-4 CC-4 SC-4 RR-4 AR-4 SEL1-4 DR-4 DS-4 SEL0-4 RW-4 OE-4 OE-5 AR-5 RR-5 SEL1-5 SEL0-5 DS-5 TR-5 DR-5 SC-5 RW-5 CC-5
REF
R114 10K 10Turn*
R115 10K 10Turn*
R116 10K 10Turn*
Vcc
C2 100nF
U2 MAX4166ESA
R2 24.9 1%
C5 100nF
R5 10K 1%
AnalogRef
TP2 2-Pin Header
JU3 Jumper
C3 100nF
U3 MAX4166ESA
R3 24.9 1%
C6 100nF
R6 10K 1%
RTV
TP3 2-Pin Header
JU2 Jumper
C1 100nF
U1 MAX4166ESA
R1 24.9 1%
C4 100nF
R4 10K 1%
Pedestal
TP1 2-Pin Header
JU1 Jumper
U4 MAX5250BEAP
SC_nCS0
SC_SCLK
SC_MOSI
SC_CL
CS SCLK DIN DOUT UPO PDL CL REFCD REFAB DGND AGND
OUTA FBA OUTB FBB OUTC FBC OUTD FBD VDD
R7 10K 1%
R8 10K 1%
R9 10K 1%
R10 10K 1%
R11 10K 1%
R12 10K 1%
R14 10K 1%
R15 10K 1%
R13 10K 1%*
3.3V
2.5V
R16 10K 1%
C7 OSCON_6SEP82M
C8 100nF
C9 100nF
Lawrence Berkeley National Lab
Gerald PRzybylski
Title
ATWD Burnin Board Clock Fan-Out
Size A
Document Number 20040308_Sheet3
Rev 0.1
Date: Tuesday, May 11, 2004
Sheet 1 of 6

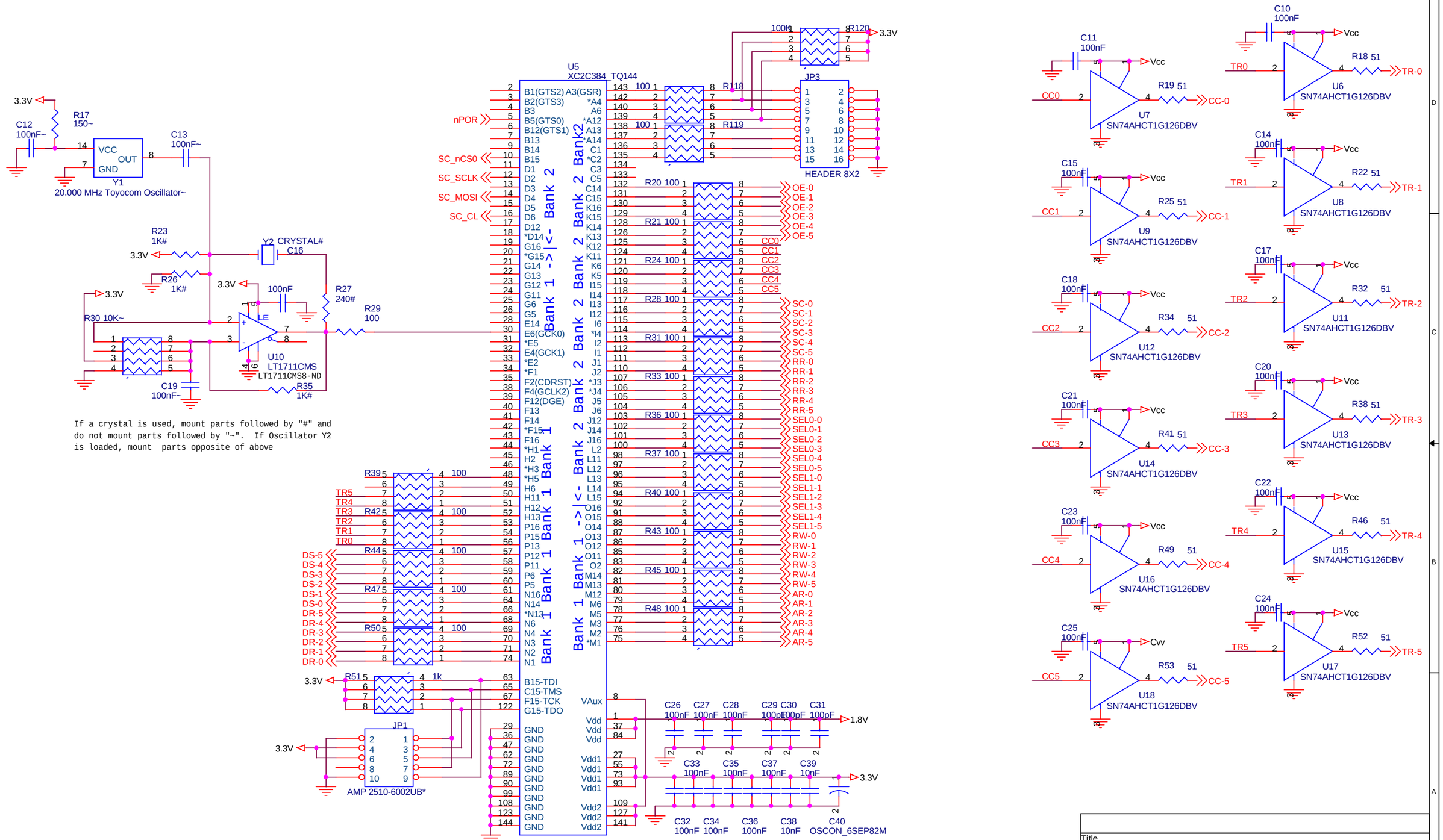

Title
PLD Engine

Size	Document Number	Rev
B	20040308_Sheet1	0.1

Date: Tuesday, May 11, 2004 Sheet 2 of 6

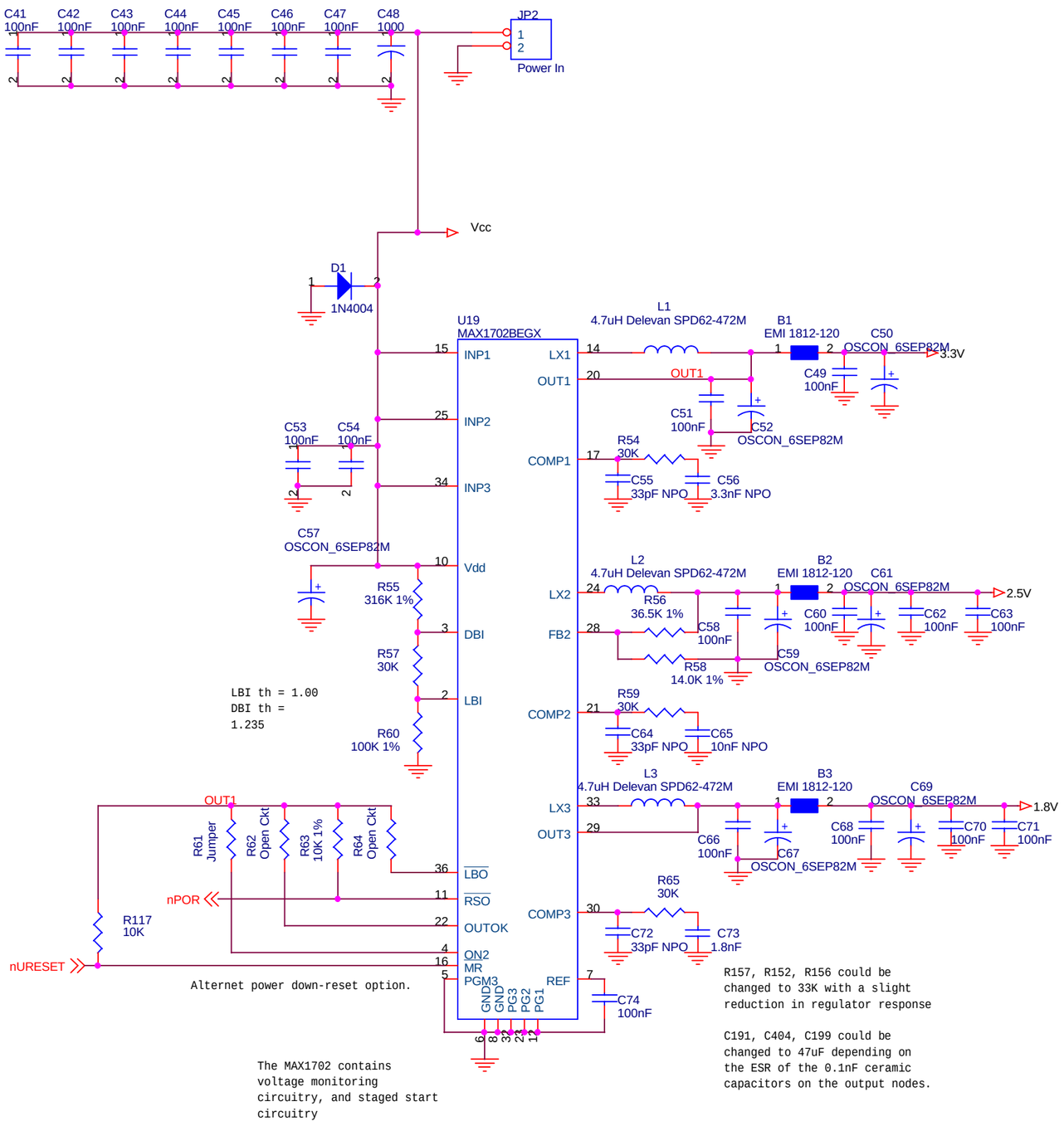

LBI th = 1.00
DBI th =
1.235

Alternet power down-reset option.

The MAX1702 contains
voltage monitoring
circuitry, and staged start
circuitry

R157, R152, R156 could be
changed to 33K with a slight
reduction in regulator response

C191, C404, C199 could be
changed to 47uF depending on
the ESR of the 0.1nF ceramic
capacitors on the output nodes.

MH01 MH.4-40
MH02 MH.4-40
MH03 MH.4-40
MH04 MH.4-40
MH05 MH.4-40
MH06 MH.4-40

Title	ATWD Burn-In Board Power	
Size B	Document Number 20040308_Sheet2	Rev 0.1
Date: Tuesday, May 11, 2004	Sheet 3 of 6	

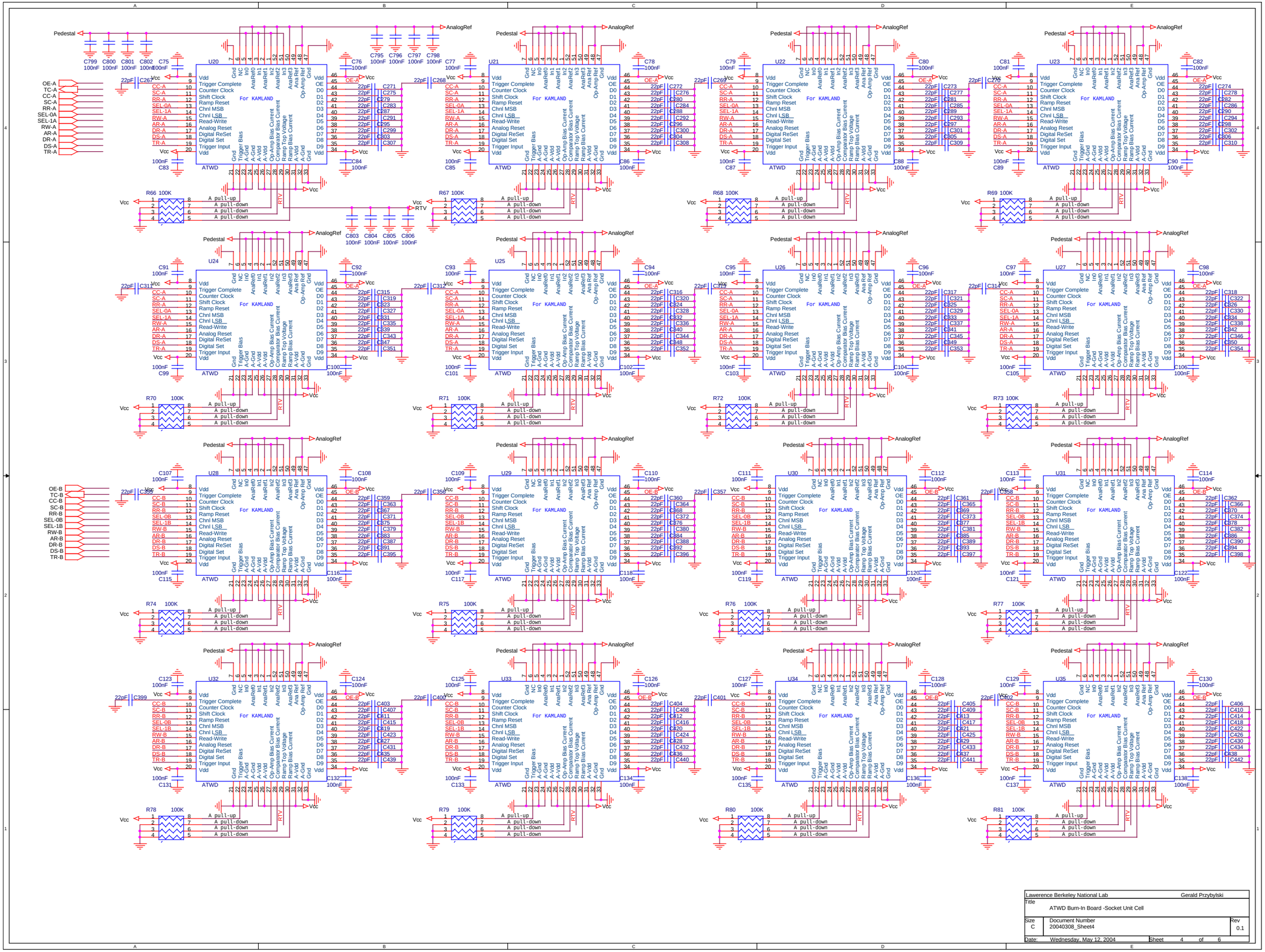

Lawerence Berkeley National Lab		Gerald Przybylski
Title: ATWD Burn-In Board -Socket Unit Cell		
Size: C	Document Number: 20040308_Sheet4	Rev: 0.1
Date: Wednesday, May 12, 2004	Sheet 4 of 6	

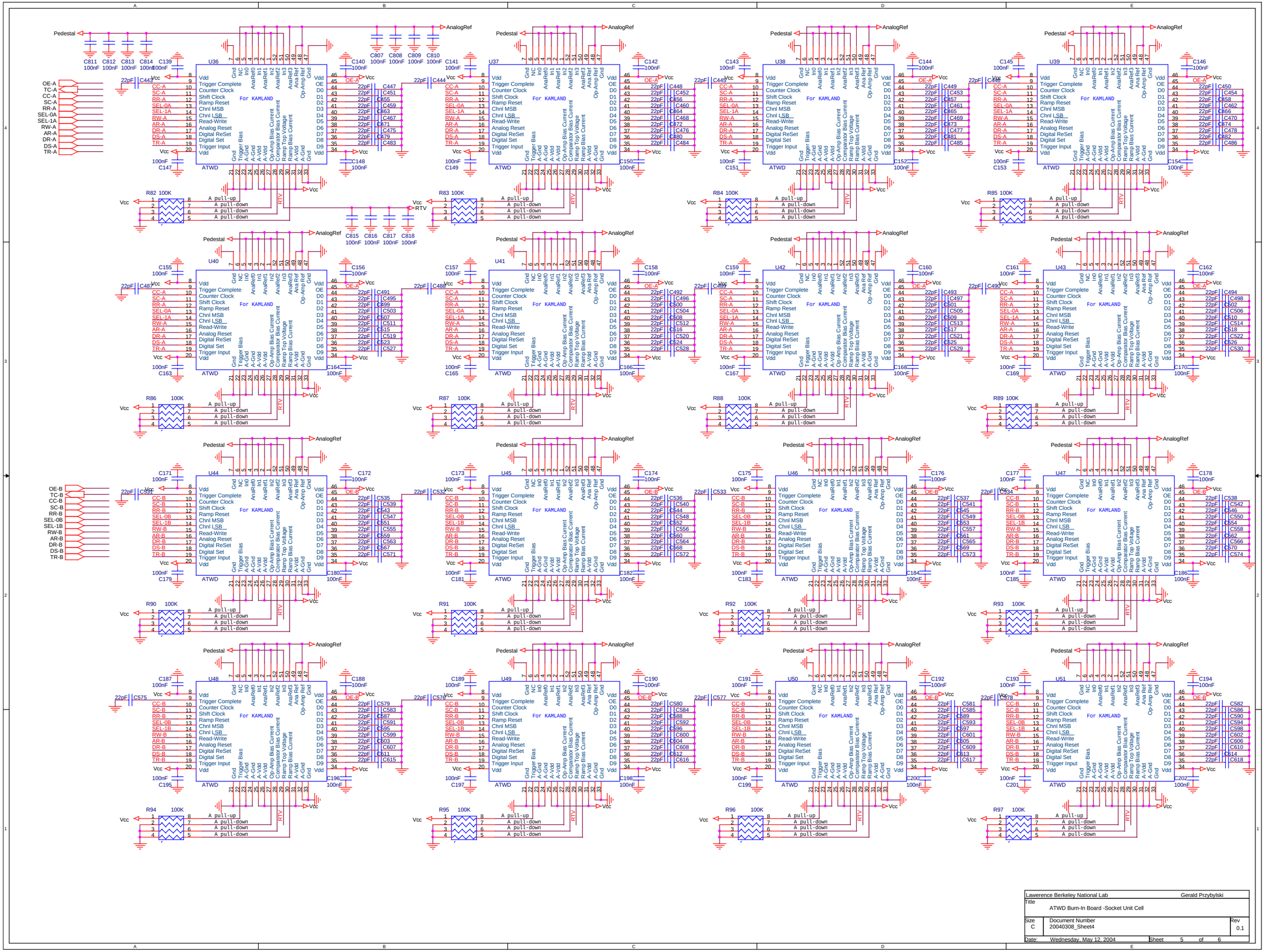

Lawerence Berkeley National Lab		Gerald Przybylski
Title: ATWD Burn-In Board -Socket Unit Cell		
Size: C	Document Number: 20040308_Sheet4	Rev: 0.1
Date: Wednesday, May 12, 2004	Sheet 5 of 6	

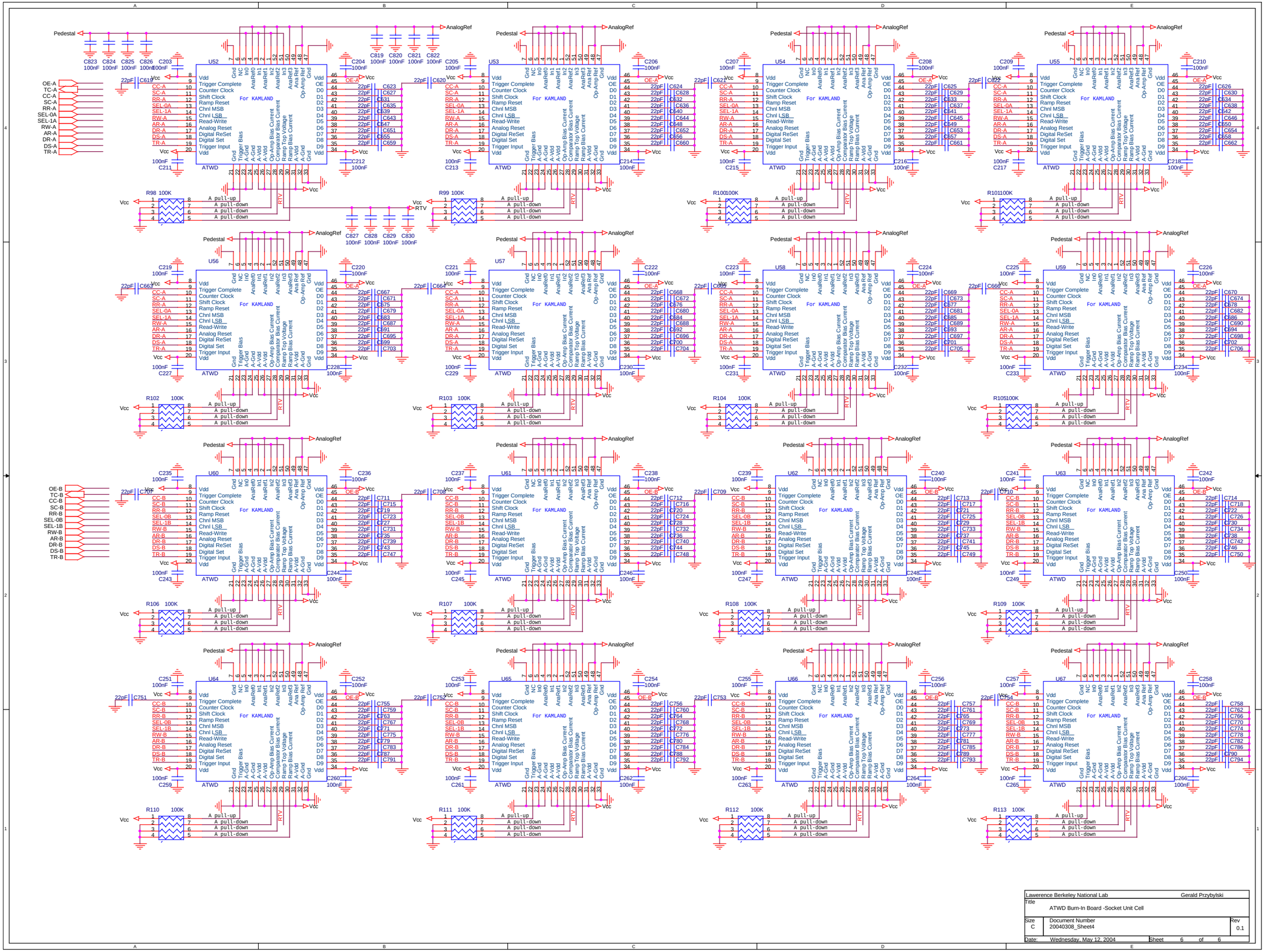

Lawerence Berkeley National Lab		Gerald Przybylski
Title: ATWD Burn-In Board -Socket Unit Cell		
Size: C	Document Number: 20040308_Sheet4	Rev: 0.1
Date: Wednesday, May 12, 2004	Sheet 6 of 6	