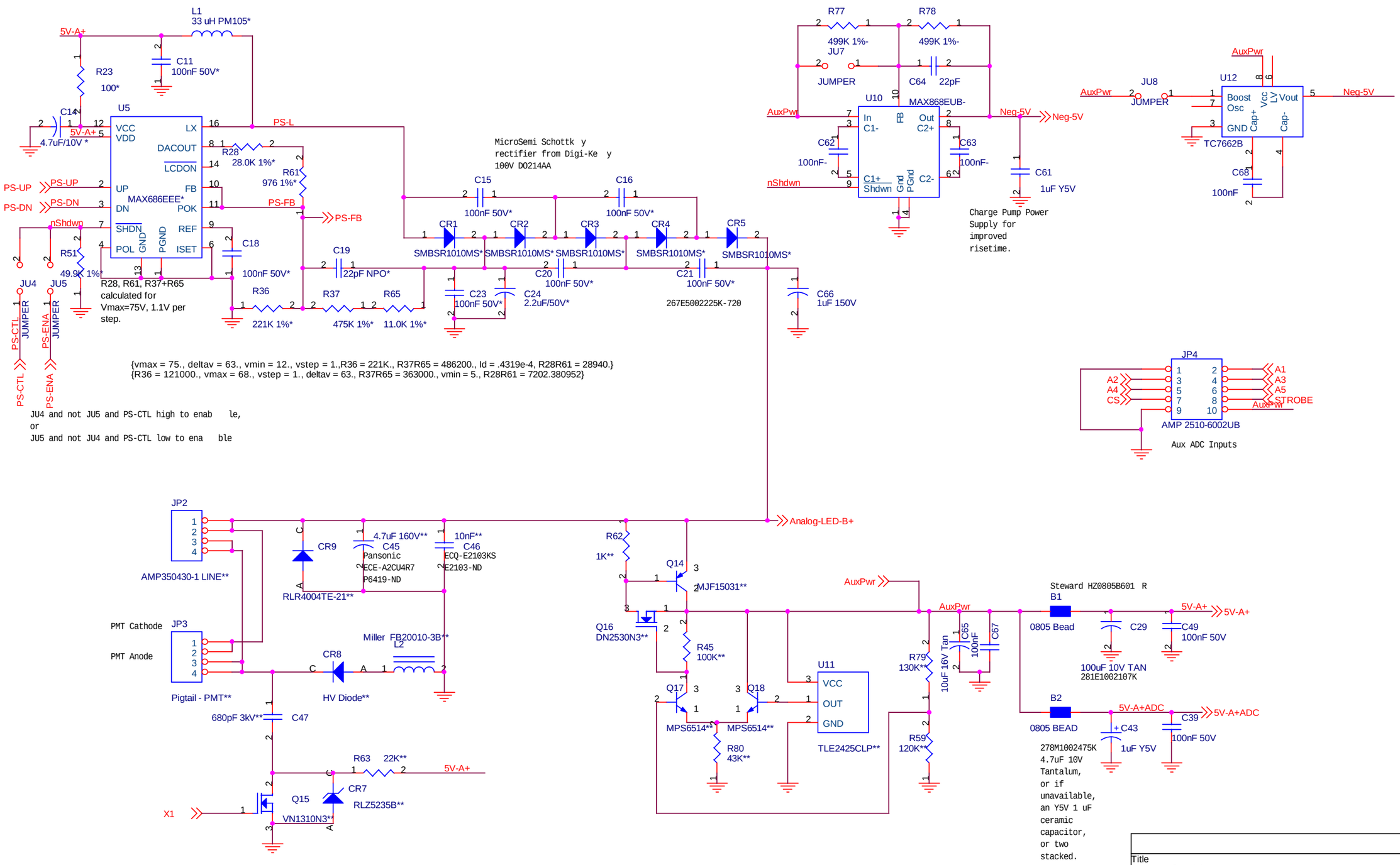

Title	Stand-Alone componens	
Size B	Document Number {Doc}	Rev 0.0
Date: Thursday, October 21, 1999	Sheet 1 of 2	

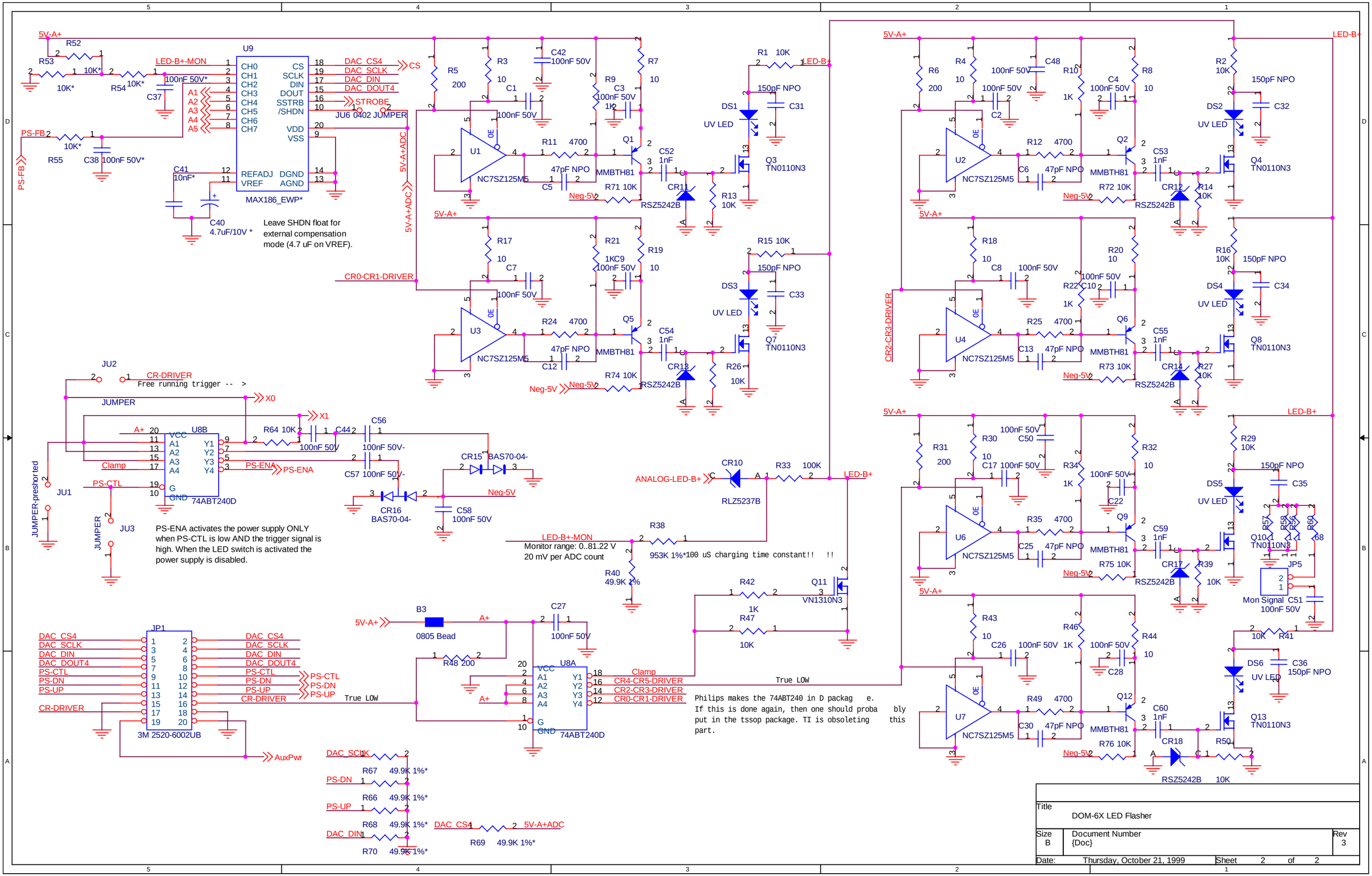
U9
MAX186_EWP*
CH0 CH1 CH2 CH3 CH4 CH5 CH6 CH7
CS SCLK DIN DOUT SSTRB /SHDN
VDD VSS
REFADJ VREF DGND AGND
DAC_CS4 DAC_SCLK DAC_DIN DAC_DOUT4 STROBE
JU6 0402 JUMPER
LED-B+-MON
PS-FB
5V-A+ 5V-A+ADC
Leave SHDN float for external compensation mode (4.7 uF on VREF).
U1 U2 U3 U4 U6 U7
NC7SZ125M5
MMBTH81
RSZ5242B
UV LED
DS1 DS2 DS3 DS4 DS5 DS6
Q1 Q2 Q3 Q4 Q5 Q6 Q7 Q8 Q9 Q10 Q11 Q12 Q13
TN0110N3
VN1310N3
CR0-CR1-DRIVER
CR2-CR3-DRIVER
CR4-CR5-DRIVER
Neg-5V
LED-B+
ANALOG-LED-B+
CR10 RLZ5237B
R33 100K
R38 953K 1%*100 uS charging time constant!! !!
R40 49.9K 1%
R42 1K
R47 10K
JU2 CR-DRIVER
Free running trigger -- >
JUMPER
X0 X1
U8B 74ABT240D
Clamp PS-CTL PS-ENA
JU1 JUMPER-preshorted
JUMPER JU3
PS-ENA activates the power supply ONLY when PS-CTL is low AND the trigger signal is high. When the LED switch is activated the power supply is disabled.
CR15 BAS70-04
CR16 BAS70-04
JP1 3M 2520-6002UB
DAC_CS4 DAC_SCLK DAC_DIN DAC_DOUT4 PS-CTL PS-DN PS-UP CR-DRIVER
AuxPwr
B3 0805 Bead
U8A 74ABT240D
Clamp CR4-CR5-DRIVER CR2-CR3-DRIVER CR0-CR1-DRIVER
True LOW
Philips makes the 74ABT240 in D packag e. If this is done again, then one should proba bly put in the tssop package. TI is obsoleting this part.
R67 49.9K 1%*
R66 49.9K 1%*
R68 49.9K 1%*
R70 49.9K 1%*
R69 49.9K 1%*
5V-A+ADC
Mon Signal
Title
DOM-6X LED Flasher
Size B
Document Number {Doc}
Rev 3
Date: Thursday, October 21, 1999
Sheet 2 of 2